CSCLED

ORDER CODE: PLB22-SK
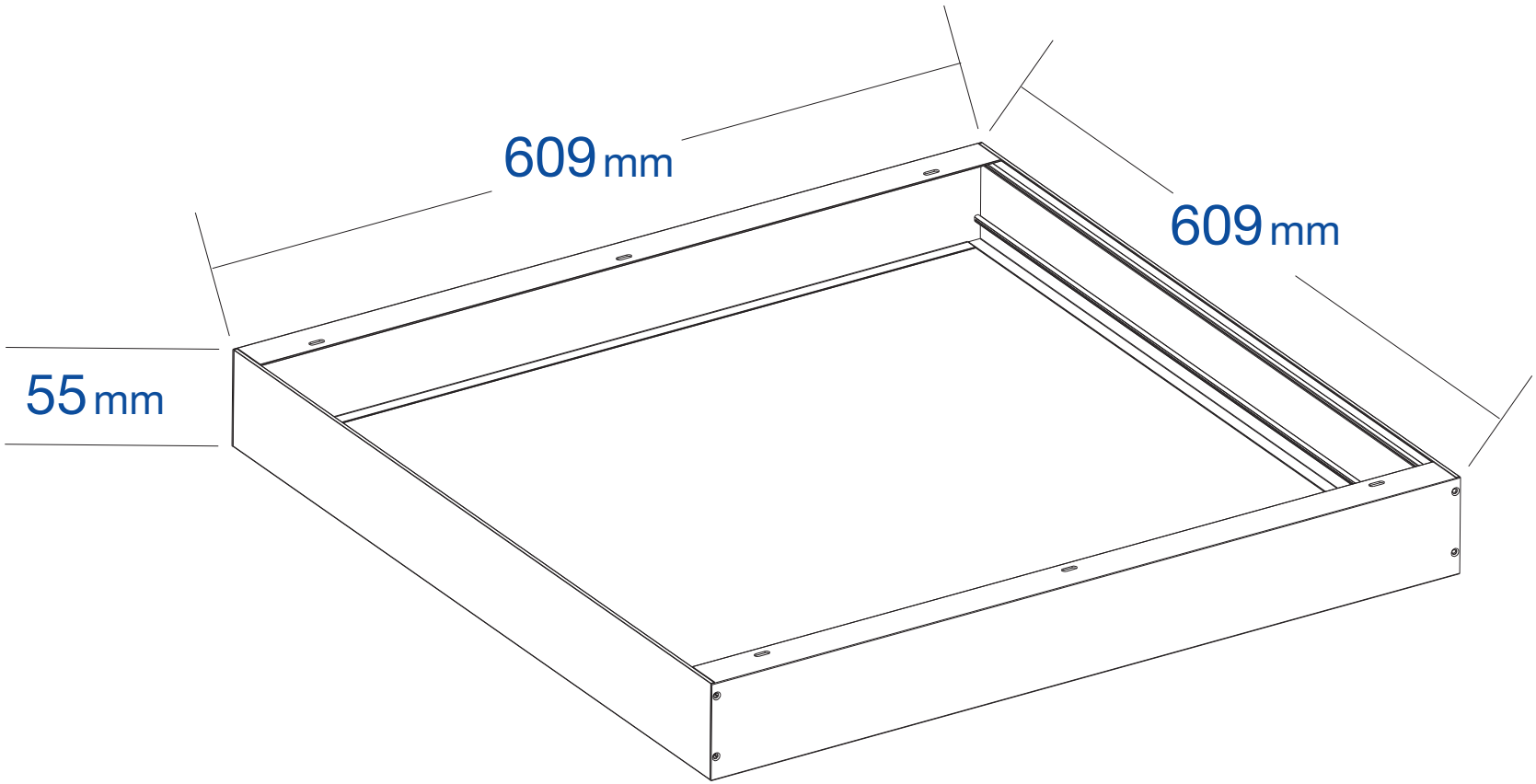
Suitable for use with **PLB22-40W-3CCT-WS-UD**